Electronic side cutter - 461/4E

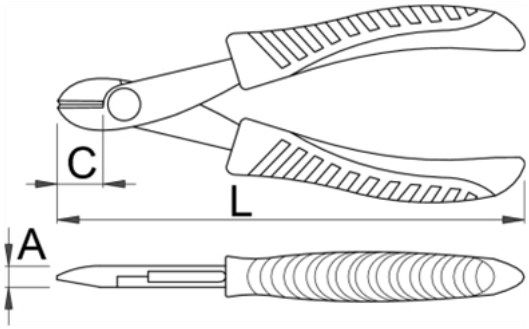

Description

- material: special tool steel
- drop forged, entirely hardened and tempered
- heavy duty double - component handles

Technical Data

	L	B	A	C				
620072	115	13	8.2	13.5	95	4B	10	-

cutting capacity (10N=1kg)

	L	max 750 N/mm² Ø⊤
620072	115	1,5

Packaging data

	Retail tool packaging						Transport package			
	L	A	B	C			A1	B1	C1	
620072	115	190	58	23	101	4	86	220	61	529